IQAirport.com

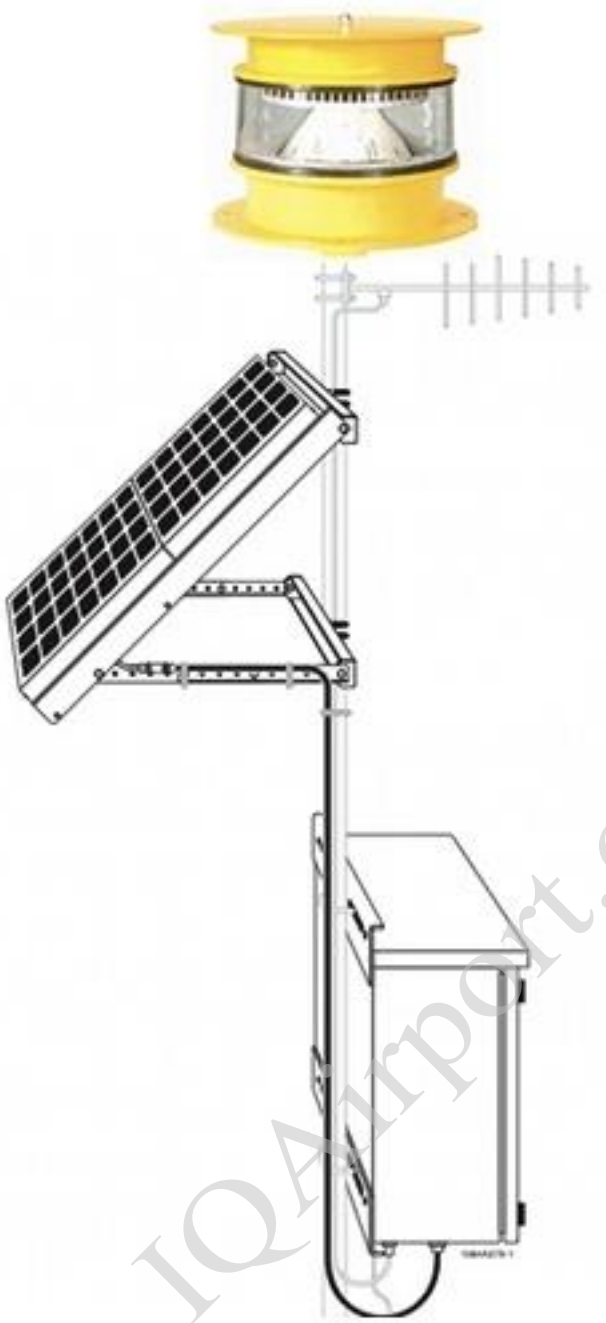

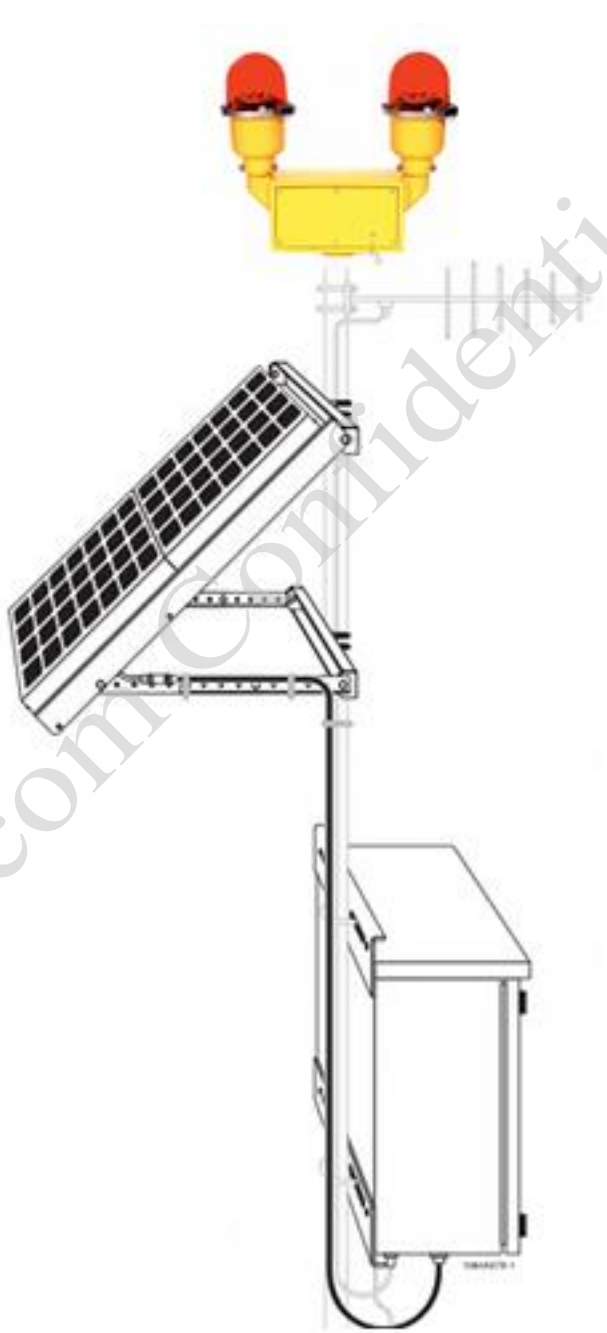

IQAirport.com Confidential

Item#: 103400
Solar Powered obstruction lighting
Manufacturer: IQAirport
Solar powered L-810 Aviation Obstruction Light, FAA approved L-810, certified and tested the
OkSolar.com Green Alternative RoHS

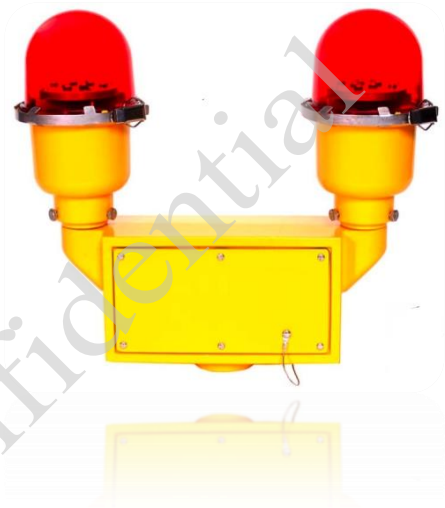

Solar FAA approved L-810, certified and tested Solar Powered obstruction lighting.
FAA L-810 Double Obstruction IQAirport.com has developed the 103400 (Solar-powered L-810 Aviation Obstruction Light) packaged system to provide obstruction lighting for towers and structures. The 103400 (Solar-powered L-810 Aviation Obstruction Light) is a complete packaged solar power system and LED High Power Obstruction Light.
The system uses an FAA type L-810 single or double red LED obstruction light. Power to the light is supplied by an IQUPS VDC solar power system consisting of a solar module, sealed maintenance-free batteries, and a temperature-compensated Microprocessor charge controller with day/night detection. The entire system is designed for quick installation and can be mounted to a 2 SCH40 pole (2.375 O.D.). An LED light is used for low power consumption. Day/night detection of the obstruction light is controlled by the Microprocessor solar charge regulator which uses the solar array to sense day/night conditions. The solar regulator also prevents the battery from being overcharged or deep discharged. An integral temperature sensor automatically adjusts the battery charge voltage to compensate for temperature fluctuations for extended battery life. The 103400 (Solar-powered L-810 Aviation Obstruction Light) packaged system is the optimal choice for FAA obstruction lighting applications where reliability is a must.

RoHS

Complete packaged solar power system and Obstruction Light. The system uses an FAA type L-810 single or double red LED obstruction light. IQAirport.com 103400 series (Solar-powered L-810 Aviation Obstruction Light) system are the optimal choice for obstruction lighting applications where reliability is a must.

Single and Double Red Obstruction Lights Solar Powered

IQAirport.com Confidential

PHOTOMETRIC DATA

FAA VERSION

FAA L-810 requires 32.5 candelas minimum over 10-deg vertical beam spread
Exceeds the recommendation of ICAO Low Intensity Type B (32 candelas)

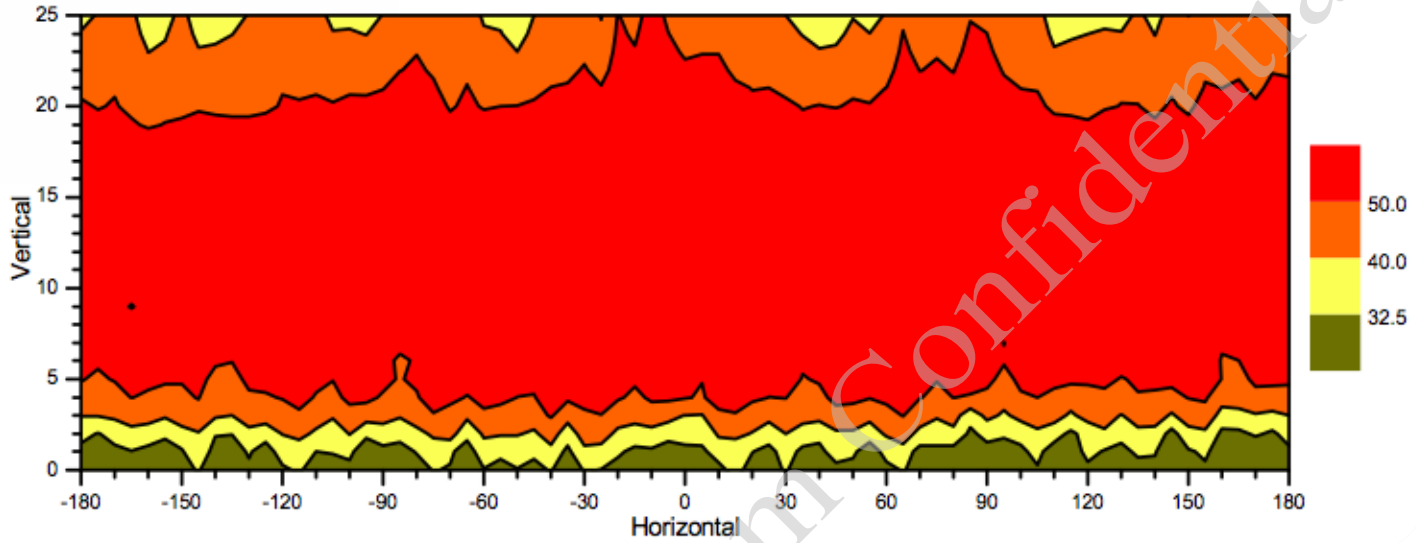

IQAirport.com Confidential

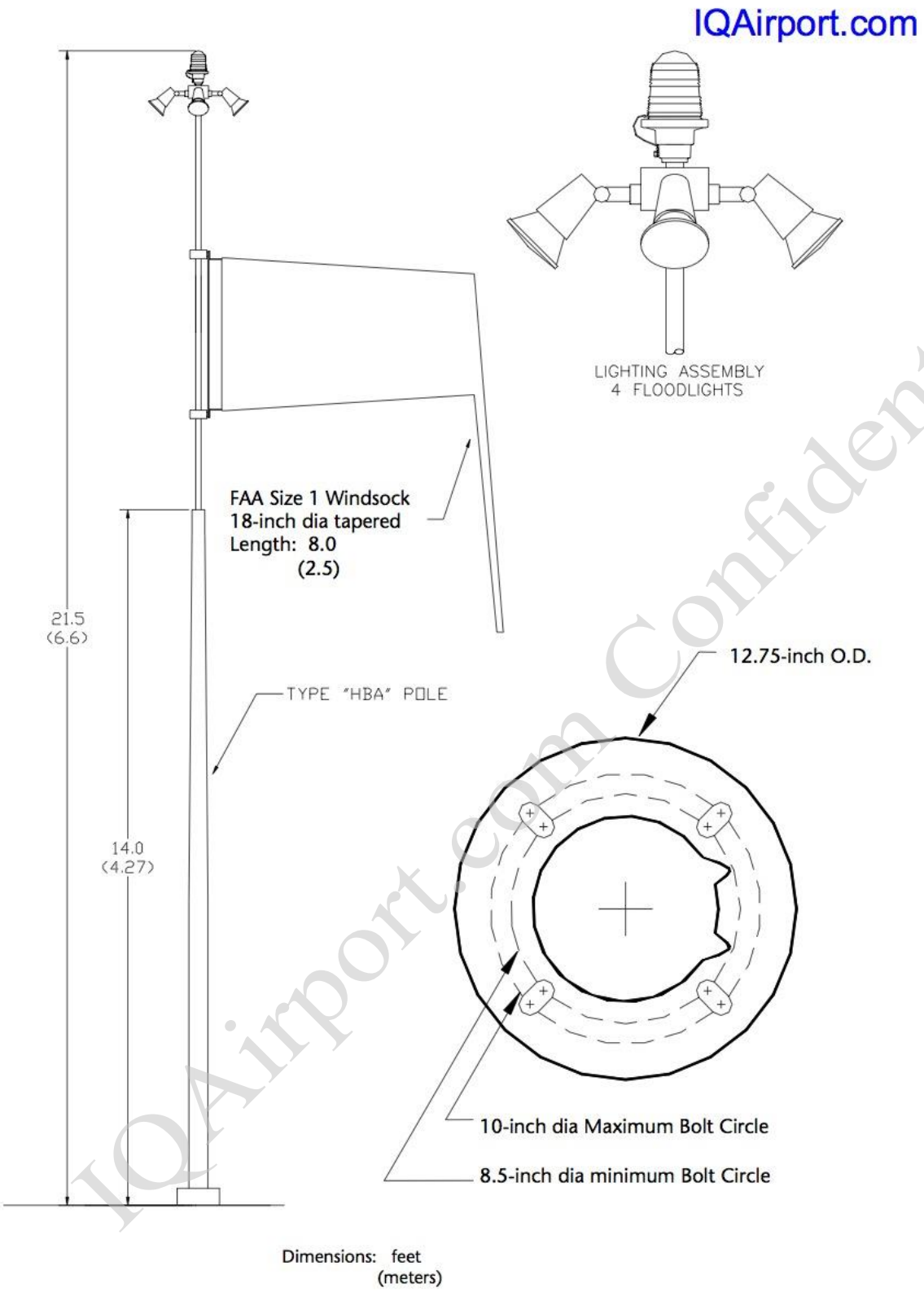

IQAirport.com Confidential

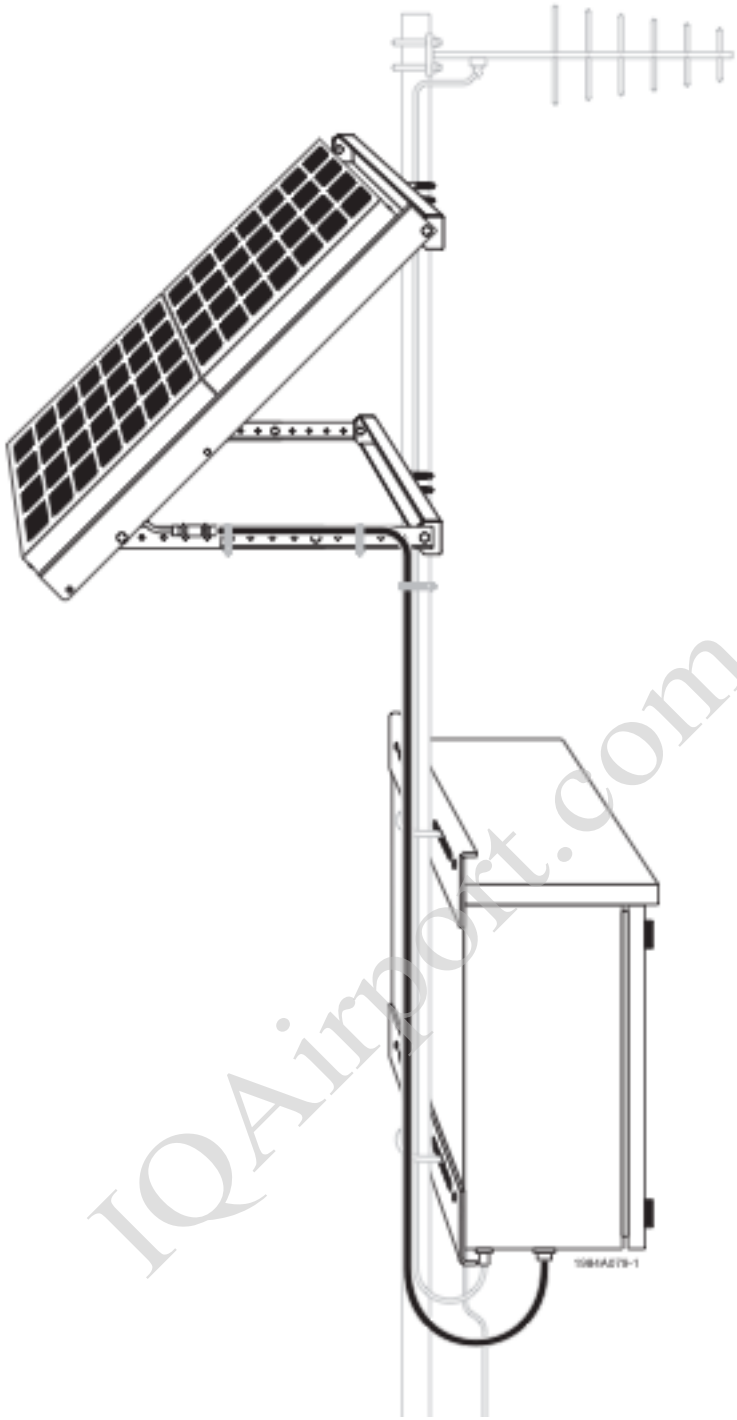

IQAirport.com Confidential

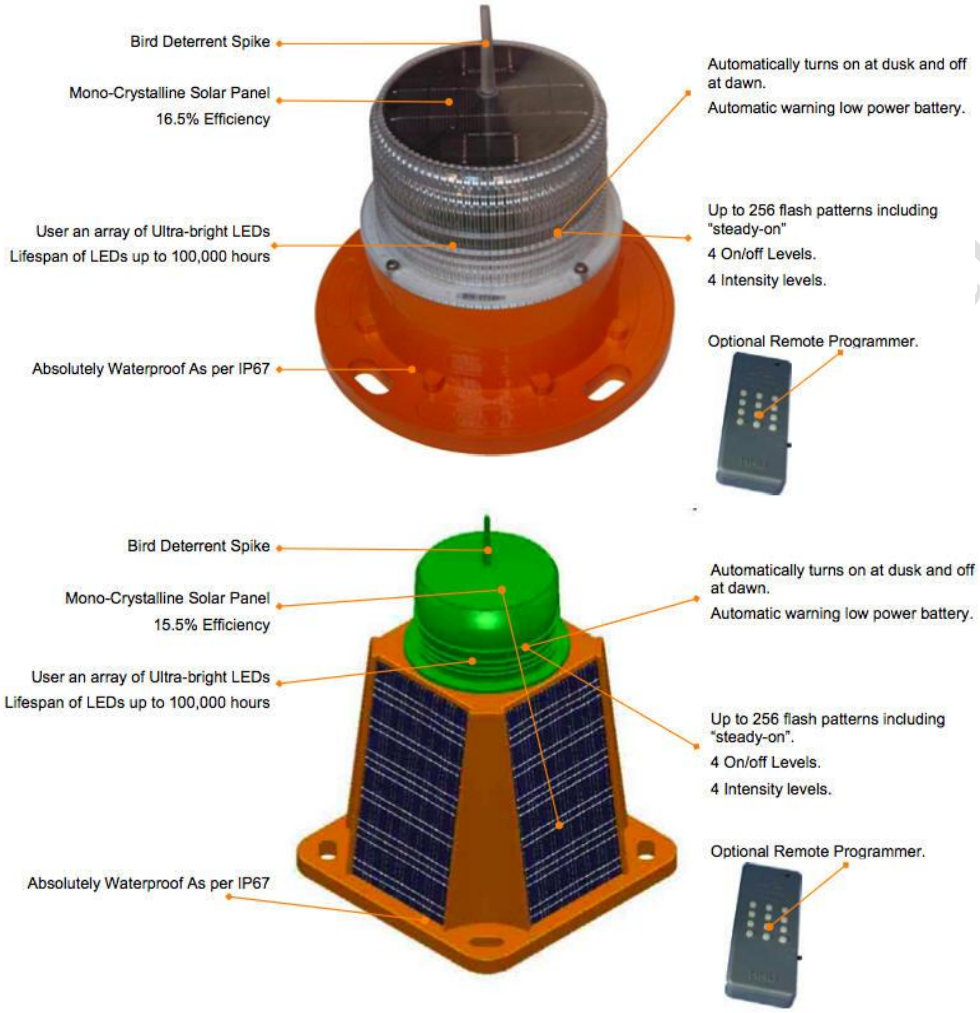
Bird Deterrent Spike
Mono-Crystalline Solar Panel
16.5% Efficiency
User an array of Ultra-bright LEDs
Lifespan of LEDs up to 100,000 hours
Absolutely Waterproof As per IP67
Automatically turns on at dusk and off at dawn.
Automatic warning low power battery.
Up to 256 flash patterns including "steady-on"
4 On/off Levels.
4 Intensity levels.
Optional Remote Programmer.
Bird Deterrent Spike
Mono-Crystalline Solar Panel
15.5% Efficiency
User an array of Ultra-bright LEDs
Lifespan of LEDs up to 100,000 hours
Absolutely Waterproof As per IP67
Automatically turns on at dusk and off at dawn.
Automatic warning low power battery.
Up to 256 flash patterns including "steady-on".
4 On/off Levels.
4 Intensity levels.
Optional Remote Programmer.

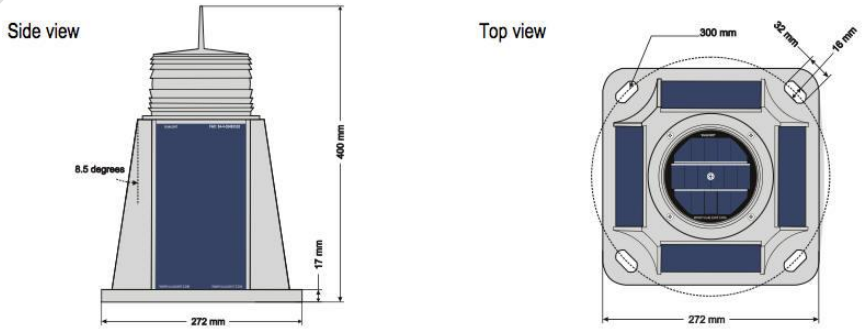
Side view
8.5 degrees
400 mm
17 mm
272 mm
Top view
300 mm
32 mm
16 mm
272 mm

Solar Powered Approach Navigational Aids Elevated Runway Guard Light

Elevated Runway Guard Light IQERGL is a 24 hour flashing, unidirectional LED lamp fixture combined with a remotely mounted solar engine. It is designed to satisfy the structural and environment requirements of FAA Advisory Circular 150– 5345 – 46B (L-804) and ICAO Annex 14 using solar power. The IQERGL solar engine contains the energy management system, solar panels and batteries. It is located on a robust tilting mount which is field adjustable between zero and sixty degrees to suit deployment at various latitudes. Solar Airfield Solutions L-804 runway guard light. The L-804 runway guard light is an elevated light fixture consisting of two lamps mounted side by side in the same housing that alternately flash 45-50 times per minute in yellow or red light to identify taxiway holding position lines.

The light fixture is unidirectional and can be aimed in elevation vertically from 0 to +20 degrees, and horizontally ±20 degrees. The L-804 is manufactured in accordance with FAA specification AC 150/5345-46B and the International Civil Aviation Organization (ICAO) specification Annex 14.

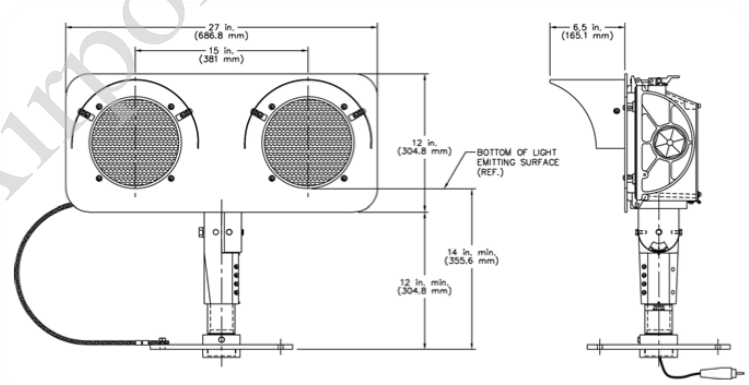

IQAirport.com Confidential

IQAirport.com

Have you checked the IQ of your Airport Lighting systems?

IQAirport.com Confidential

Contact Information: http://www.IQAirport.com/contact - **Email:** Sales@OkSolar.com

IQAirport.com

Have you checked the IQ of your Airport Lighting systems?

IQAirport.com Confidential

Contact Information: http://www.IQAirport.com/contact - **Email:** Sales@OkSolar.com

How To Solar Windsock Lighting by IQAirport.com Manufacturer and Exporter of FAA approved Solar Windsock Lighting L-806 and L-807

IQAirport.com Confidential

IQAirport.com

Have you checked the IQ of your Airport Lighting systems?

Parts

IQAirport.com Confidential

Contact Information: http://www.IQAirport.com/contact - **Email:** Sales@OkSolar.com

GSA SAM SYSTEM FOR AWARD MANAGEMENT

IQAirport.com

Have you checked the IQ of your Airport Lighting systems?

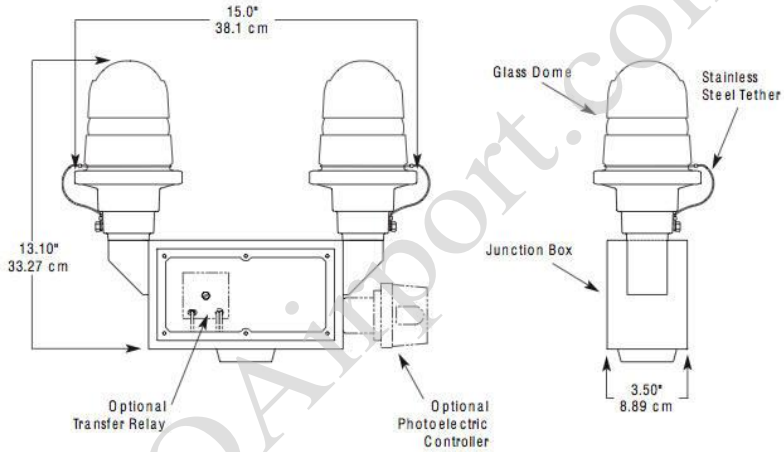

IQAirport.com Confidential

Contact Information: http://www.IQAirport.com/contact - **Email:** Sales@OkSolar.com

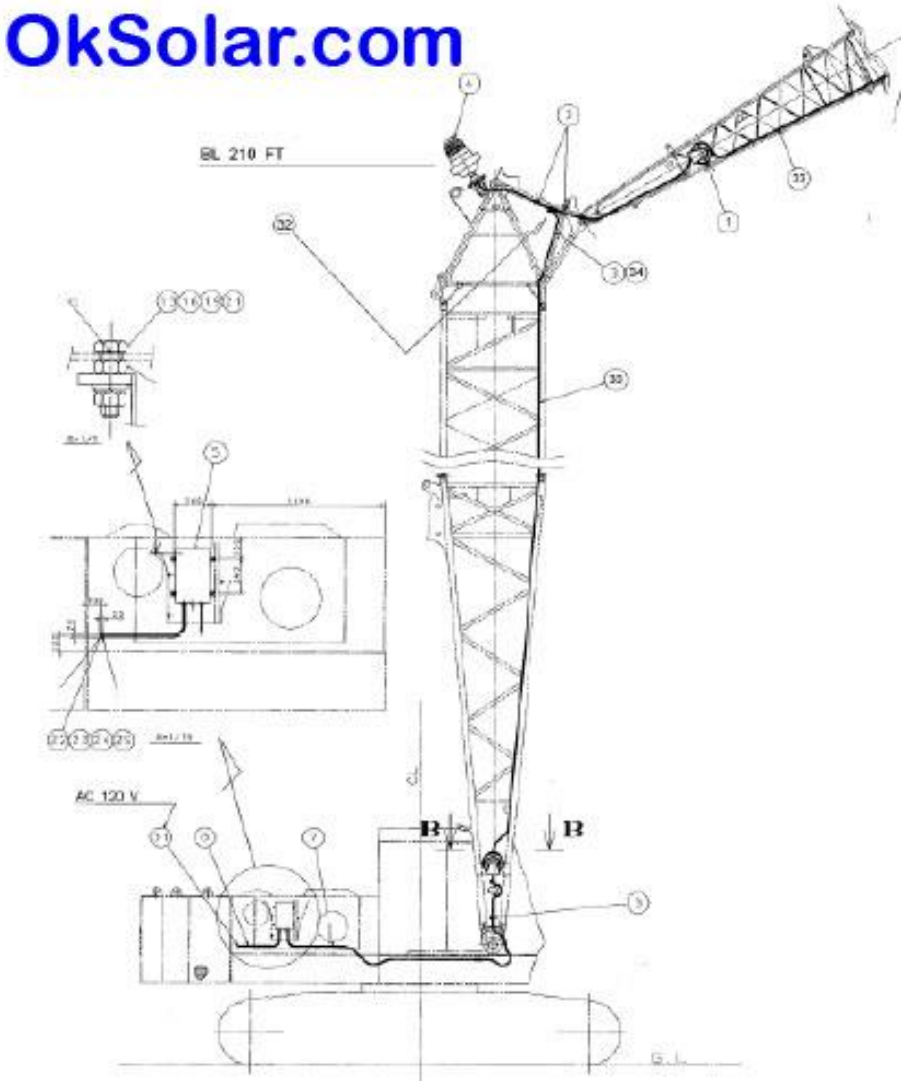
OkSolar.com
BL 210 FT
AC 120 V
B
B

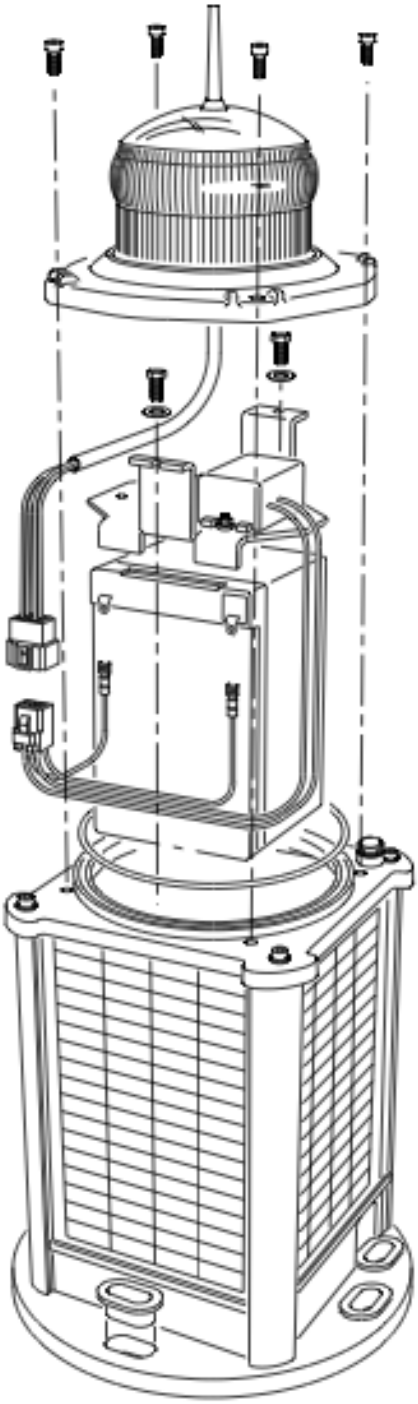

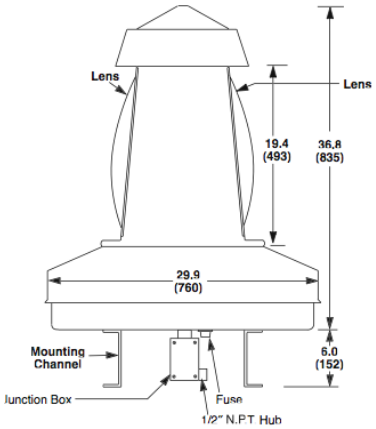
Lens
Lens
19.4
(493)
36.8
(835)
29.9
(760)
Mounting
Channel
6.0
(152)
Junction Box
Fuse
1/2" N.P.T. Hub

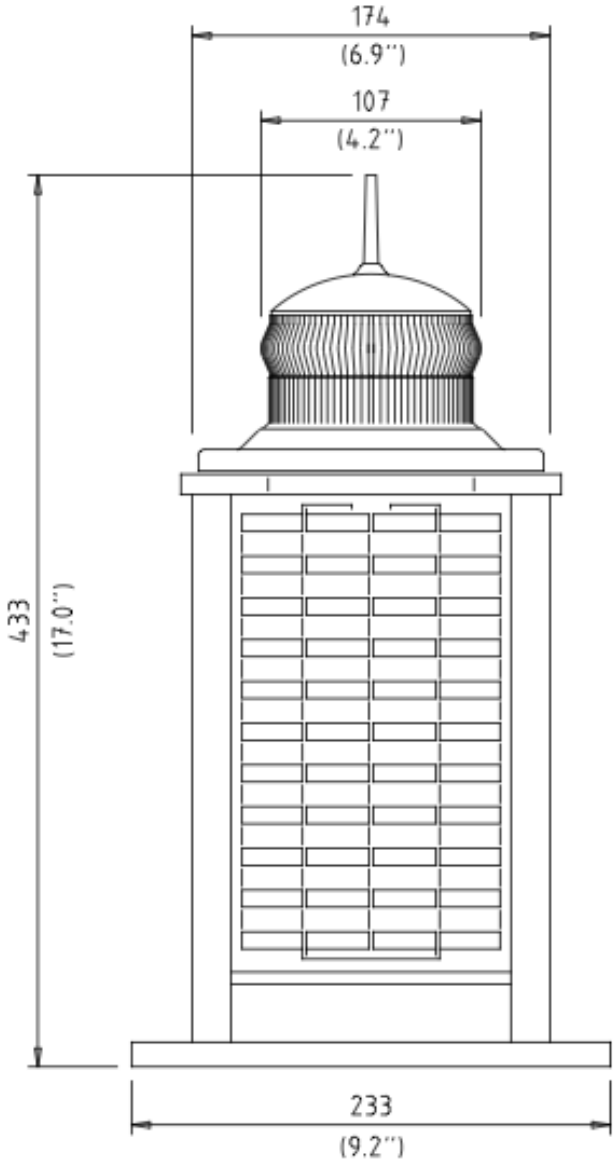

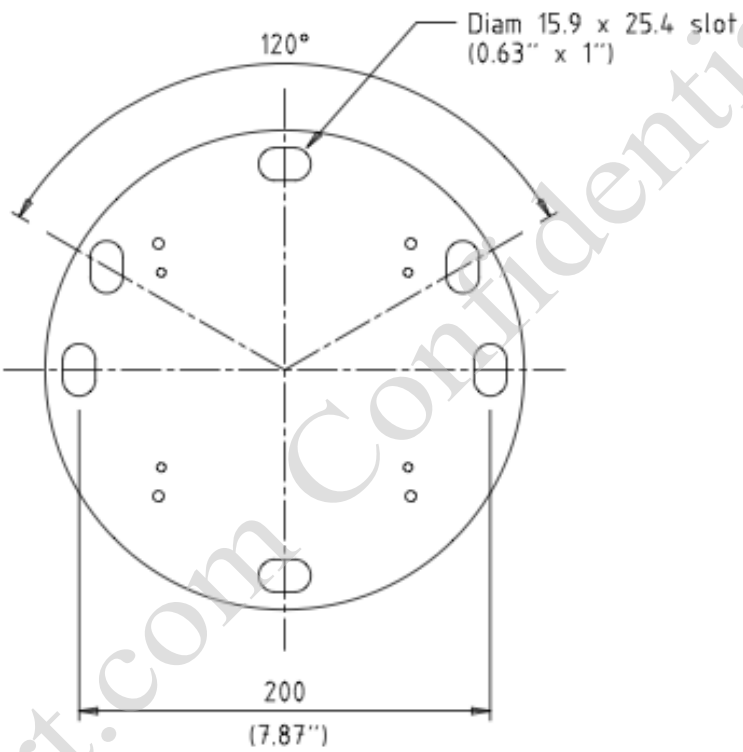

IQAirport.com Confidential

IQAirport.com Confidential

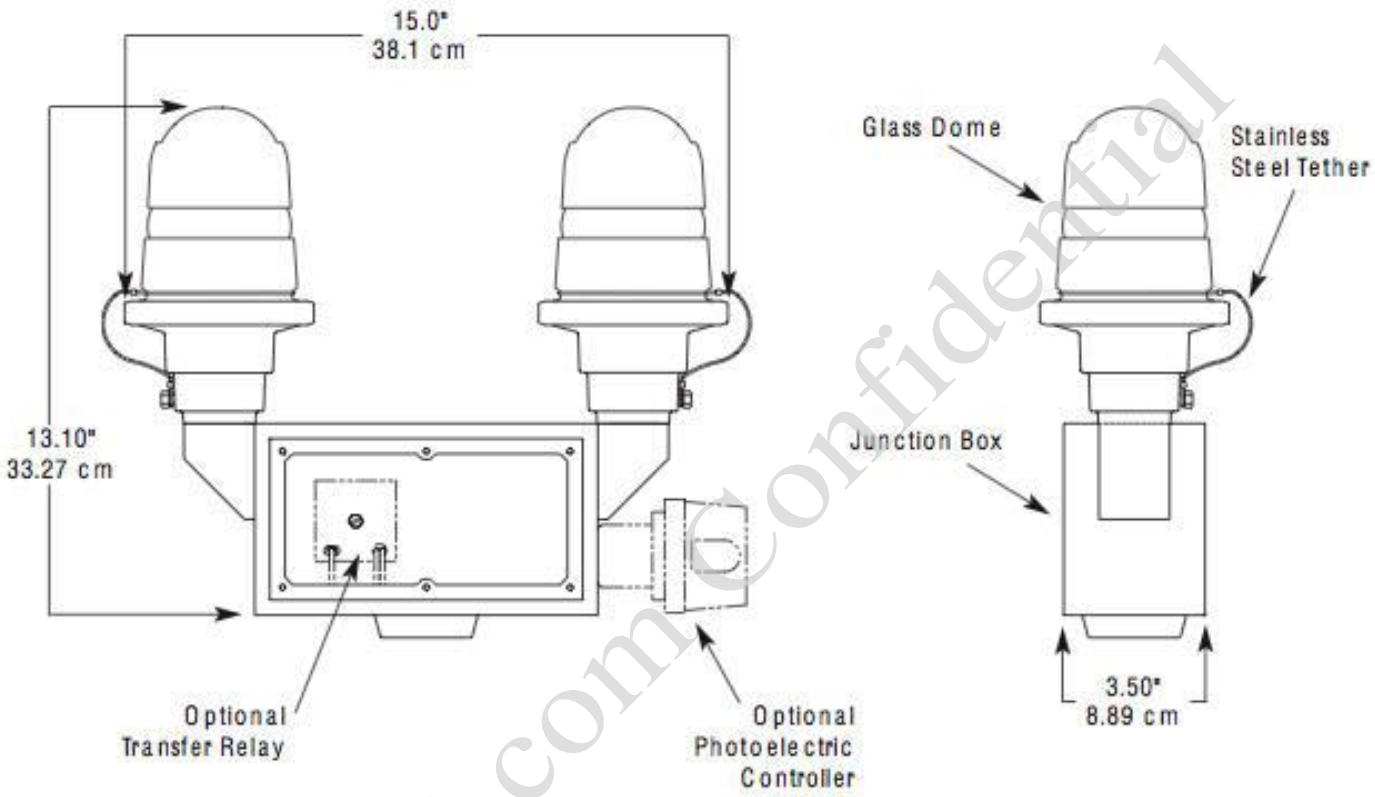

IQAirport.com Confidential

IQAirport.com

Have you checked the IQ of your Airport Lighting systems?

IQUPS Base stations cut diesel usage by 75 percent Increase Safety and Independence from the grid The IQ Green Option. Item# 2523

IQUPS.com has designed a base station for mobile networks that would run on sun, wind power and fuel cells.

If you company need an energy source and want a more environmentally friendly solution than the conventional diesel generators that usually power base stations out of reach from electricity grids.

IQ Base stations, comes with solar panels on the roof a wind turbine in the network tower and fuel cells in the interior of the unit. The (Solar Panels, Wind Generator and Fuel Cells) renewable energy sources charge a bank of battery that powers the base station day and night 24/7. As a complement, it has a small diesel generator.

The IQ Base Station has an IQ intelligent Power Management operating system, which learns and adapts to the local conditions. We offer with USB Biometric Password Manager provide users a convenient and secure way to manage and access multiple security phrases and codes. This product biometrically identifies users and gives them convenient access to password protected applications and web sites. IQUPS CommLink around the world!

Check the status of your PV-Wind-Fuel Cell plant from your home, your office or anywhere you may be. A PC with an internet browser is all that is needed to access the system.

Communications provides complete plant monitoring, remote diagnosis, data storage and display. It features an integrated HTTP web interface that allows you to access plant information via a PC, regardless of operating system or browser type.

IQUPS CommLink the link between the PV plant and its owner. It combines computing power, storage capacity, and versatile communications interfaces in a compact enclosure. The data-logger offers up-to-date display and control options on the internet.

Data transfer and plant configuration via the internet is handled either by Ethernet connection or telephone modem. Data transfer is automatic all you have to do is set the desired intervals.

IQAirport.com Confidential

Contact Information: http://www.IQAirport.com/contact - **Email:** Sales@OkSolar.com

Our Systems use State of the Art Plug and Play

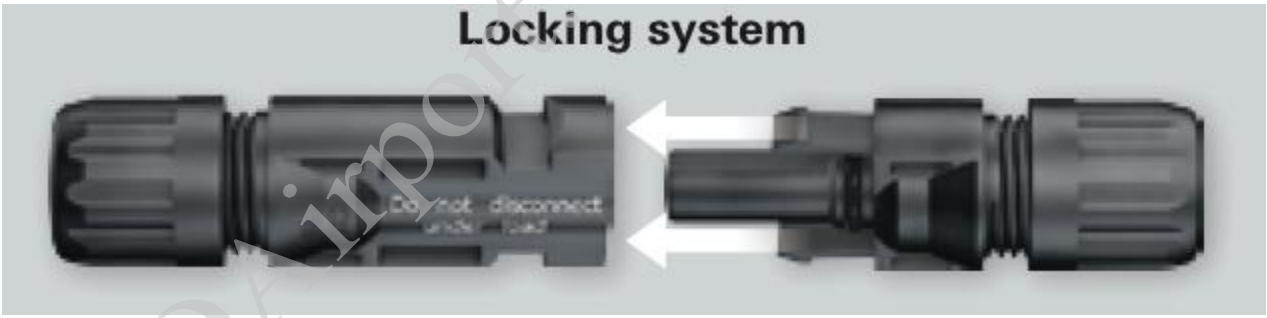

IQAirport.com Confidential

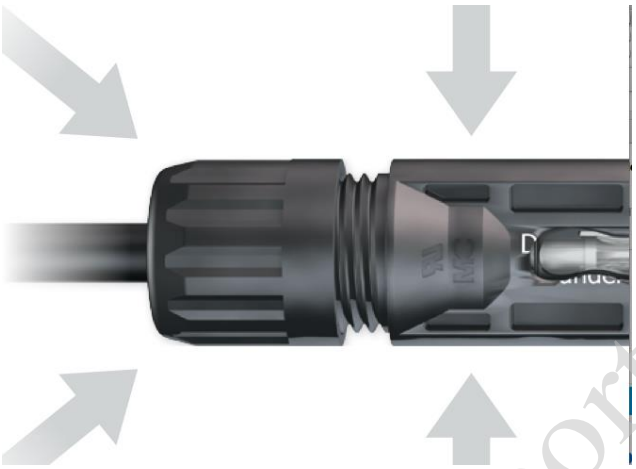

IQAirport.com Confidential

IQAirport.com

Have you checked the IQ of your Airport Lighting systems?

Airport Parking lot lighting and Airfield Perimeter Security Lighting Self Contained

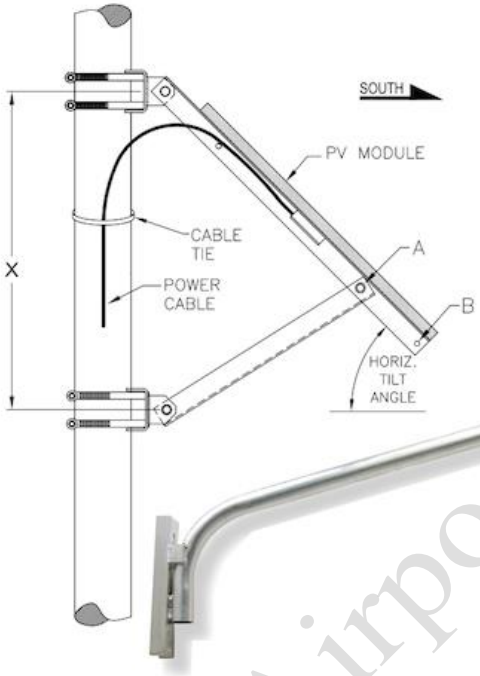

OkSolar.com

IQAirport.com Confidential

Contact Information: http://www.IQAirport.com/contact - **Email:** Sales@OkSolar.com

Airport and Airfield Traffic Controls Your Speed Self Contained

IQAirport.com Confidential

IQAirport.com Confidential

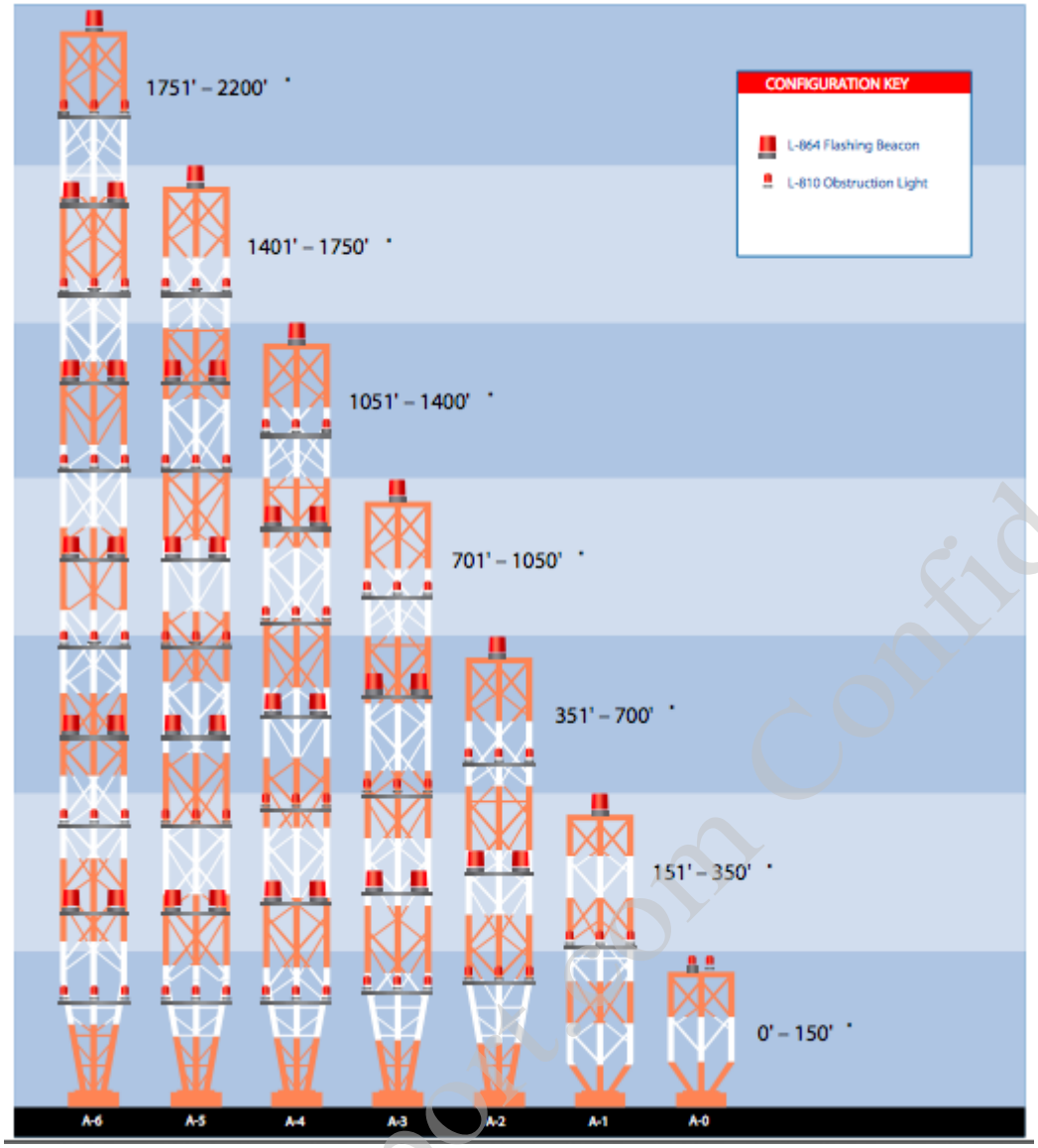

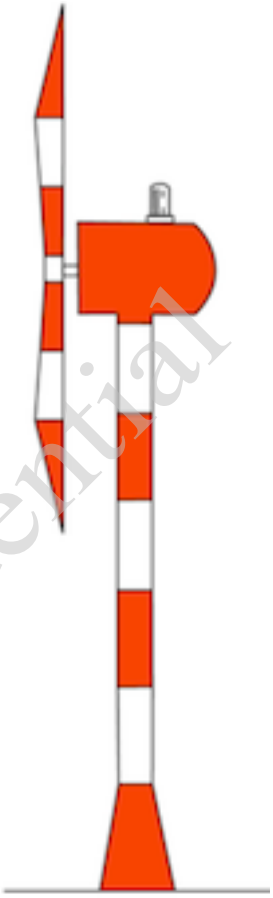

IQAirport.com Confidential

IQUPS Base stations cut diesel usage by 75 percent Increase Safety and Independence from the grid The IQ Green Option. Item# 2523

IQUPS.com has designed a base station for mobile networks that would run on sun, wind power and fuel cells.

If you company need an energy source and want a more environmentally friendly solution than the conventional diesel generators that usually power base stations out of reach from electricity grids.

IQ Base stations, comes with solar panels on the roof a wind turbine in the network tower and fuel cells in the interior of the unit. The (Solar Panels, Wind Generator and Fuel Cells) renewable energy sources charge a bank of battery that powers the base station day and night 24/7. As a complement, it has a small diesel generator.

The IQ Base Station has an IQ intelligent Power Management operating system, which learns and adapts to the local conditions. We offer with USB Biometric Password Manager provide users a convenient and secure way to manage and access multiple security phrases and codes. This product biometrically identifies users and gives them convenient access to password protected applications and web sites. IQUPS CommLink around the world!

Check the status of your PV-Wind-Fuel Cell plant from your home, your office or anywhere you may be. A PC with an internet browser is all that is needed to access the system.

Communications provides complete plant monitoring, remote diagnosis, data storage and display. It features an integrated HTTP web interface that allows you to access plant information via a PC, regardless of operating system or browser type.

IQUPS CommLink the link between the PV plant and its owner. It combines computing power, storage capacity, and versatile communications interfaces in a compact enclosure. The data-logger offers up-to-date display and control options on the internet.

Data transfer and plant configuration via the internet is handled either by Ethernet connection or telephone modem. Data transfer is automatic all you have to do is set the desired intervals. IQUPS View communicates PV system status from the IQUPS.com controller over a broadband or wireless internet connection to a website for 24/7 access. The website displays real- time and historic data as well as advance alerts of any potential system problems. All of the hardware and software is included to enable a simple plug and play installation. By avoiding expensive site visits, the IQUPS Web View will reduce the life cycle costs of off-grid PV systems. Battery Bank. http://www.oksolar.com/PDFiles/Airfield_Crouse-Hinds-Obstruction-Brochure.pdf

IQAirport.com Confidential

IQAirport.com

Have you checked the IQ of your Airport Lighting systems?

Your next scheduled maintenance of IQ Solar Lighting systems will be in 5 to 7 years!

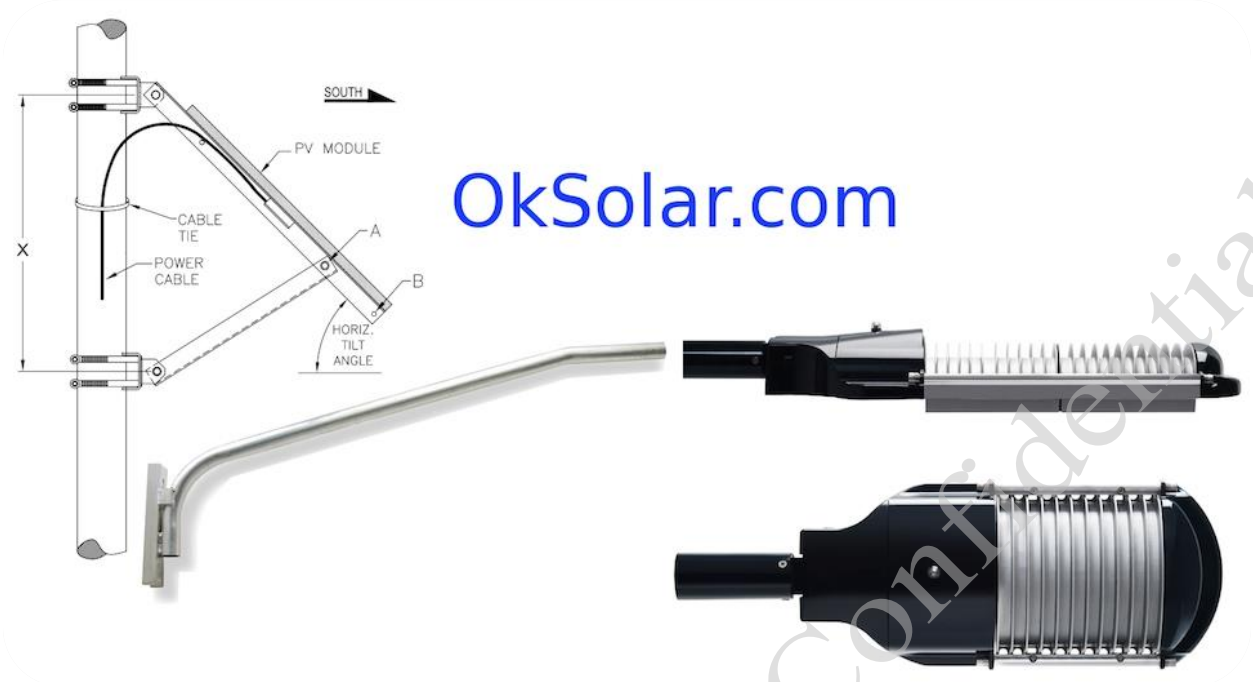

IQAirport.com Confidential

Complete turn-key systems: The systems are designed for installation onto a wood, concrete, or metal mounting pole. All components needed for installation are included, except for the mounting arm and pole,

which can be ordered separately. The solar units provide all the energy needed for system operation, so installation and maintenace expense are minimal

LED Lighting anywhere any time Deploy in about 5 to 10 minutes.
Mobile Units deploy worldwide and at a moment's notice, rugged enough to withstand transits to the location and operations anywhere anytime.

Operating description: This area lighting system converts the sun's energy into electricity and stores it to provide 10 hours or Dusk to Down ilumination plus three to seven day's worth of backup energy. The System automatically activates itself at sunset and stays on until sunrise.

System Life Expectancy:

- **Battery Life Expectancy:** Minimum life expectancy of five years, but they typically have a duration of seven to eight years.
- **Solar Collector Life Expectancy:** Minimum life expectancy of 21 years, but they typically have a duration of 21-25 years.

Features Include:

- Photovoltaic solar panel.
- Battery specifically designed for deep cycle PV applications. (Maintenance Free Batteries!
- Electronic charge controller.
- Solar Panel pole mounting (Adjustable 0 to 90 degrees Stainless steel fasteners)
- Designed to withstand high wind velocities.
- **Optional:** Cast aluminum housing pad enclosure with a lockable door.

Test Conditions: of 1.5 air mass spectrum; 20 degrees C ambient air temp.; 1 sun, (1000 watts per square meter at POA irradiance); 1 meter per second wind speed at 10 meters above grade)

Activation Switch On/Off: A microprocessor automates the functions of the system automatically activates form sunset to sunrise; has a timer, regulating the hours the light stays on; also regulates the battery, preventing overcharging and protecting against discharging. **Optional** wireless on/off

Operating time while fully charged: 8-10 hours per day x 2-5 continuous rainy days Daily For extended run times use we suggest adding Item# 160799

Daily Radiation Zone: Designed for Zone with 4-5 Hours of daily Insulation.
Temperature of work environment: Optimal Ambient -20 to +25 C (-4 to 77 F)
Maximum Ambient Temperature -40 to +80 C (-40 to 176 F).

IQAirport.com Confidential

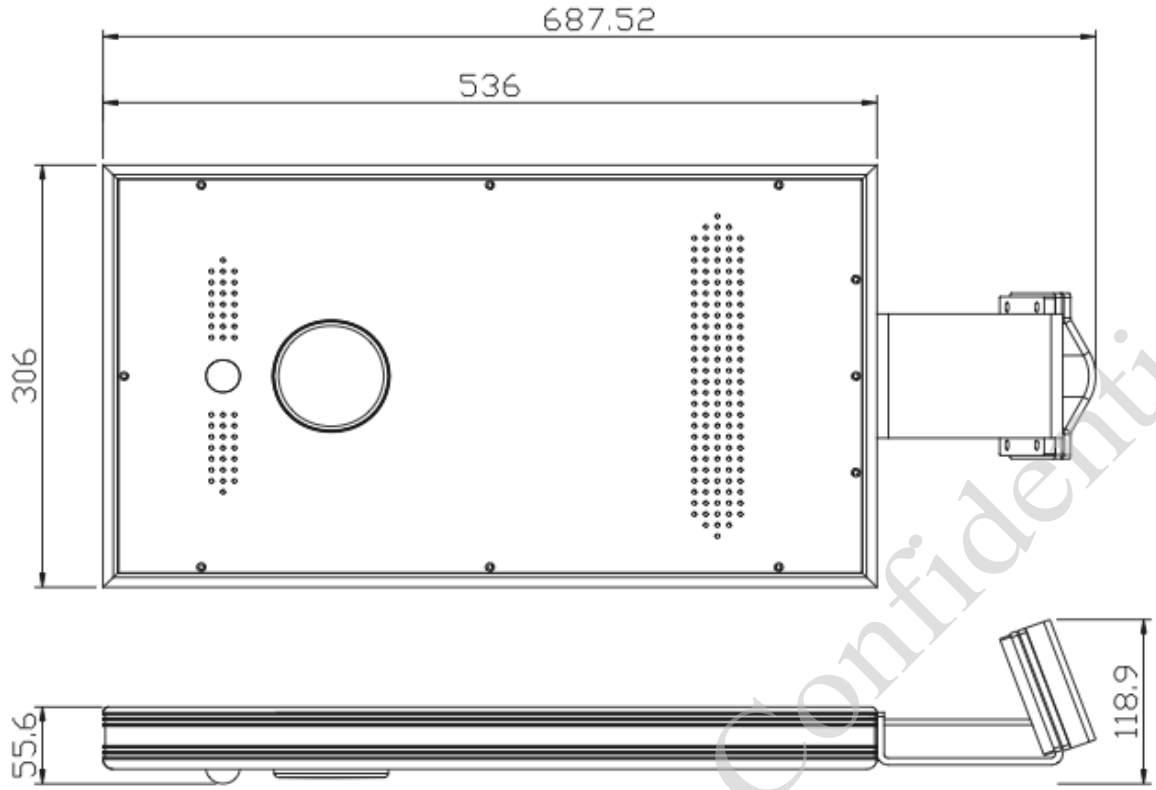

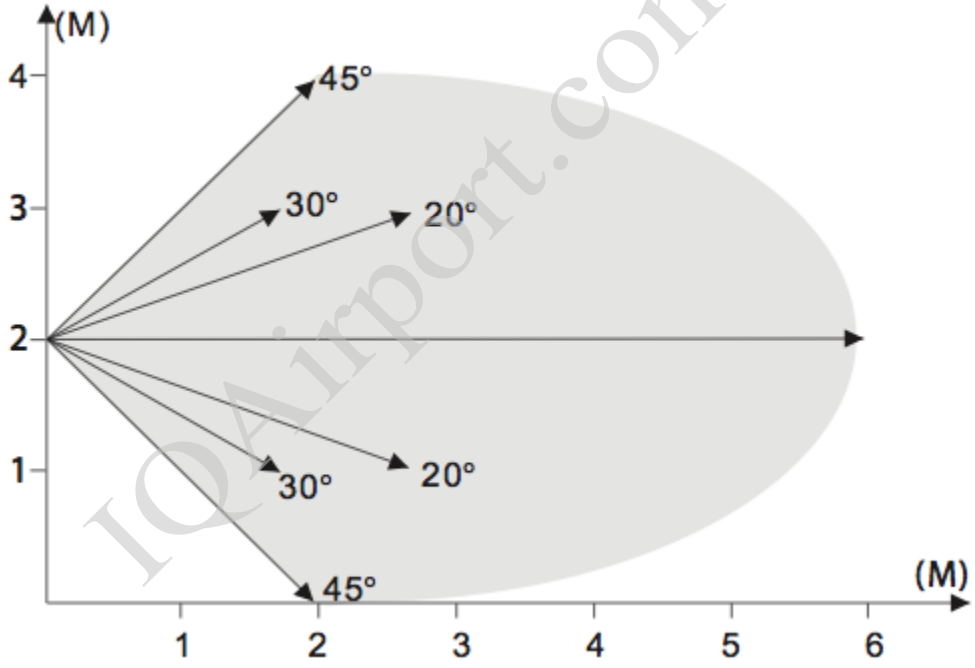

IQAirport.com Confidential

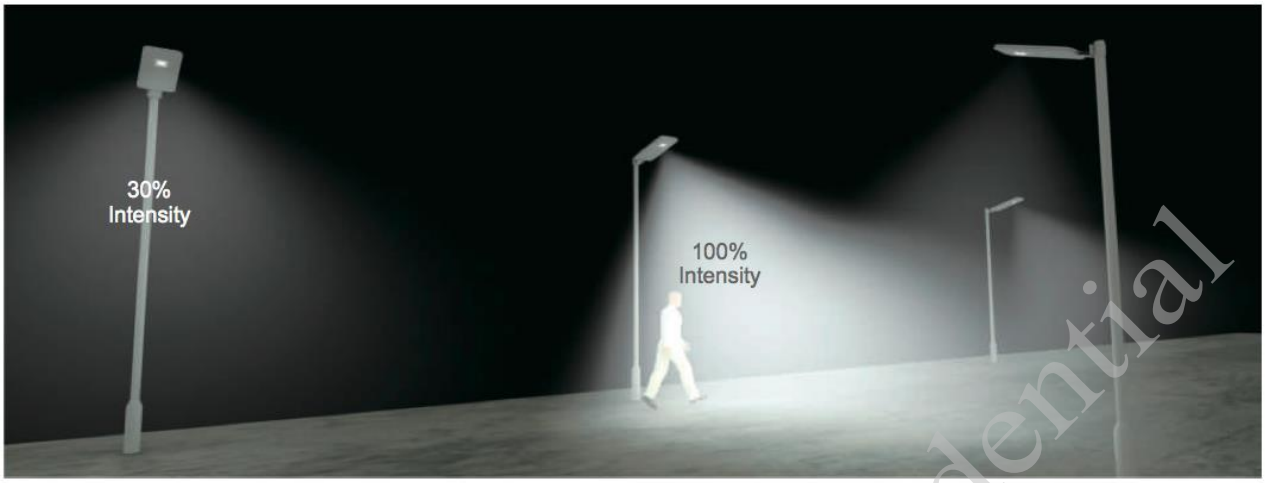

Solar lights works at dim mode when humans are not around. Integrated Passive Infrared. Sensor to increase light output when motion is detected.

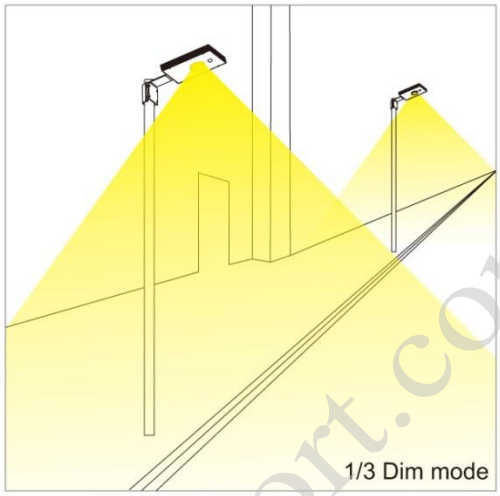

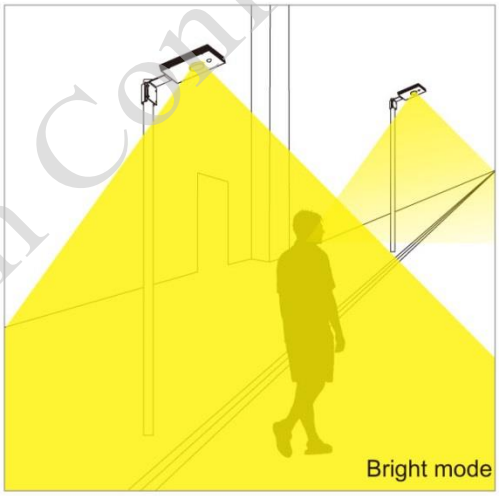

IQAirport.com Confidential

IQAirport.com

Have you checked the IQ of your Airport Lighting systems?

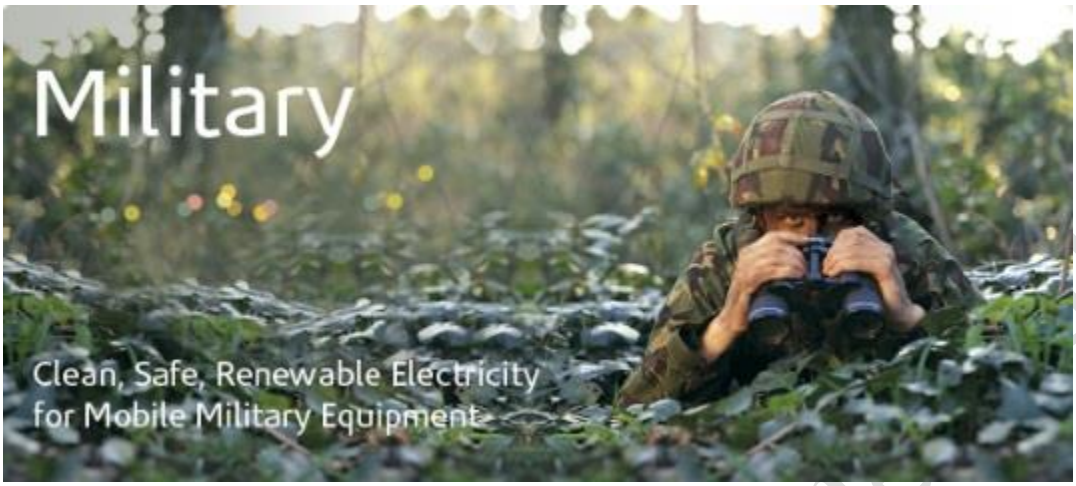

Civil Industrial and Military Applications Remote Controlled Bullet, Explosion Proof and defense applications, the unit is also available in infrared (IR). ***Contact Us Today!***

Bullet Proof Side Protected your Fixtures and Lamps

- Designed to stop small arms fire .22 to .44 calibers
- Simple one bolt installation
- Excellent stoppage from 9mm handguns, the most popular vandalism hand gun on the streets
- Will withstand most field vandalism compact, eye appealing design
- Does not interfere with routine maintenance
- Mounts on all standard pole arms

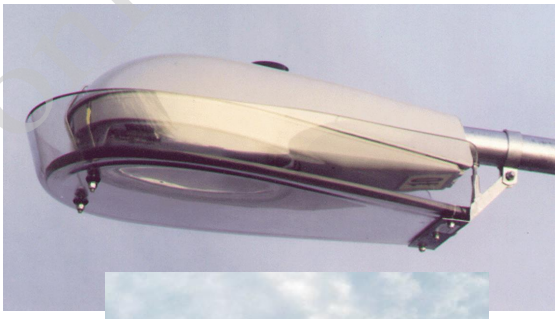

OkSolar.com Confidential

Contact Information: http://www.IQAirport.com/contact - **Email:** Sales@OkSolar.com

0168100 Explosion proof Light LED 400+ Super Bright LED UL Listed for Standard 844.

OkSolar.com

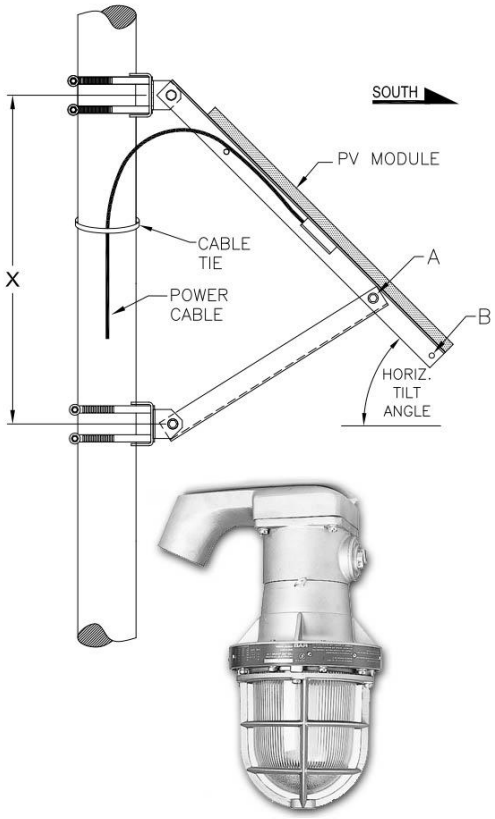

Construction Features Lamp compartment is factory sealed from wiring chamber, eliminating on-the-job sealing. Inspection hole provides easily accessible splice space. There is nothing to hold while splicing to line. Set screw to stem keeps fixture from turning during relamping. Three close-up plugs furnished with four whole junction box. Mounting lugs are standard. IQLED Lamp: LED 400+ Super Bright LED.

Housings: Heavy cast aluminum. Unit withstands 1490 lbs. per square inch hydrostatic pressure during UL testing

Wiring: Wiring is factory sealed. Inspection hole provides easy access to splice compartment

Globe: Impact and heat resistant clear prismatic design affords excellent light control

Finish: Silver Gray Epoxy powder coat

Reflectors: Heavy gauge aluminum with highly reflective white acrylic finish

Socket: Medium base glazed porcelain. Leads pass through sealing compound that separates lamp chamber from wiring compartment. Heavy gauge nickel plated copper components. Spring loaded center contact

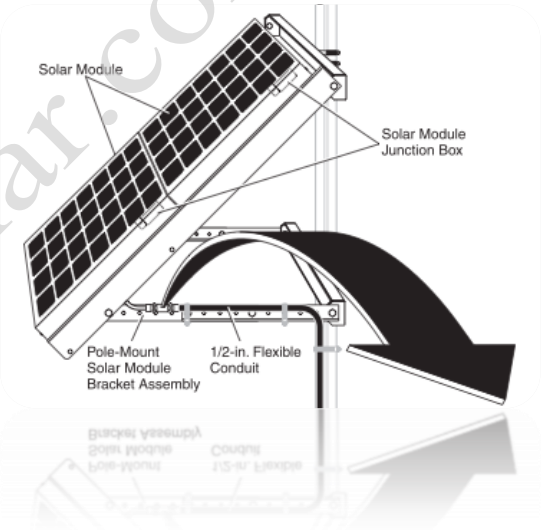

OkSolar.com Confidential

IQAirport.com

Have you checked the IQ of your Airport Lighting systems?

Ok Confidential

Contact Information: http://www.IQAirport.com/contact - **Email:** Sales@OkSolar.com

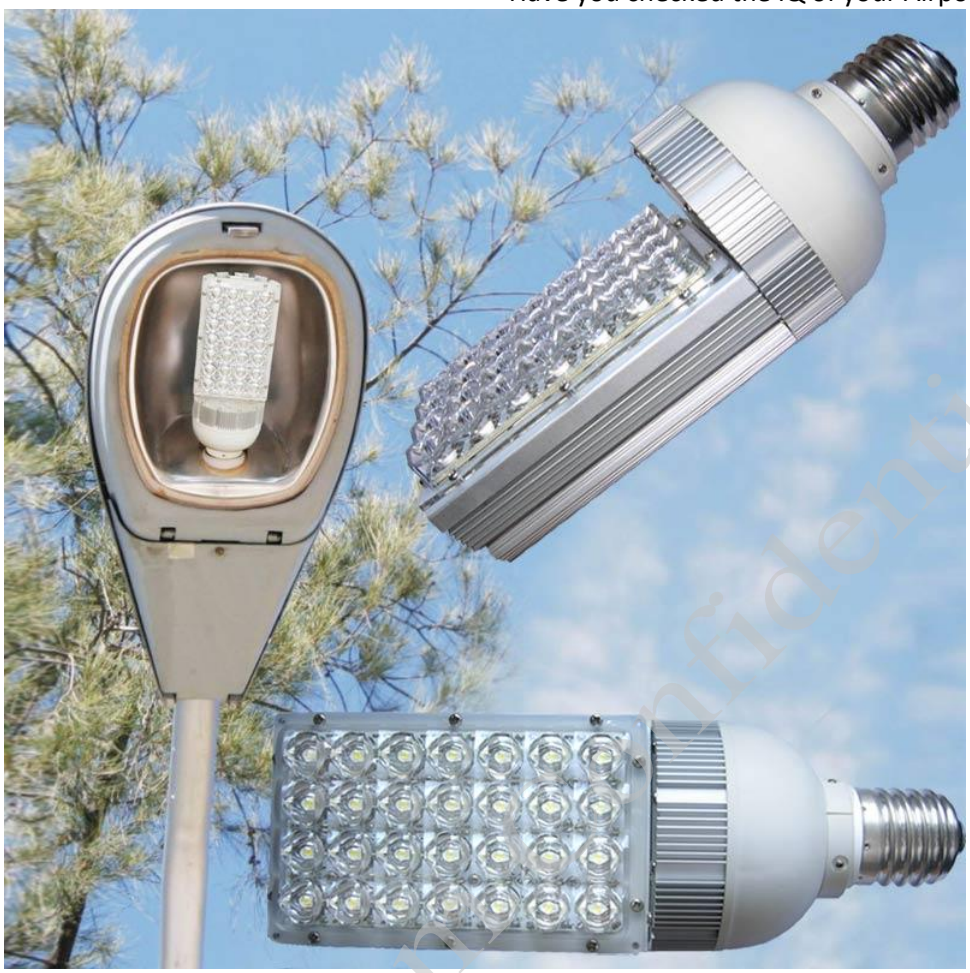

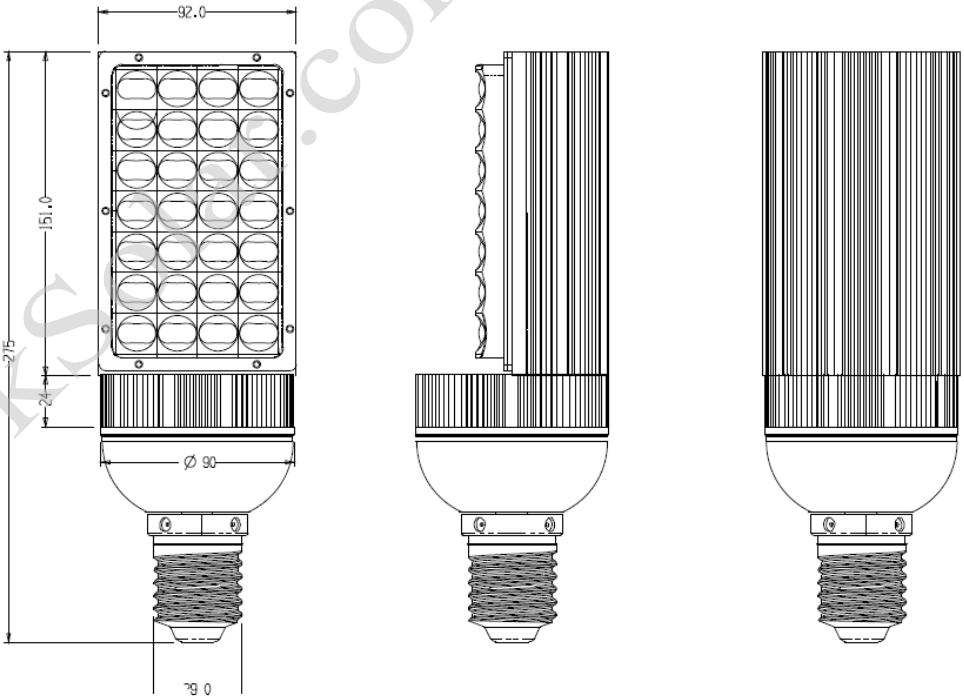

OkSolar.com Confidential

\

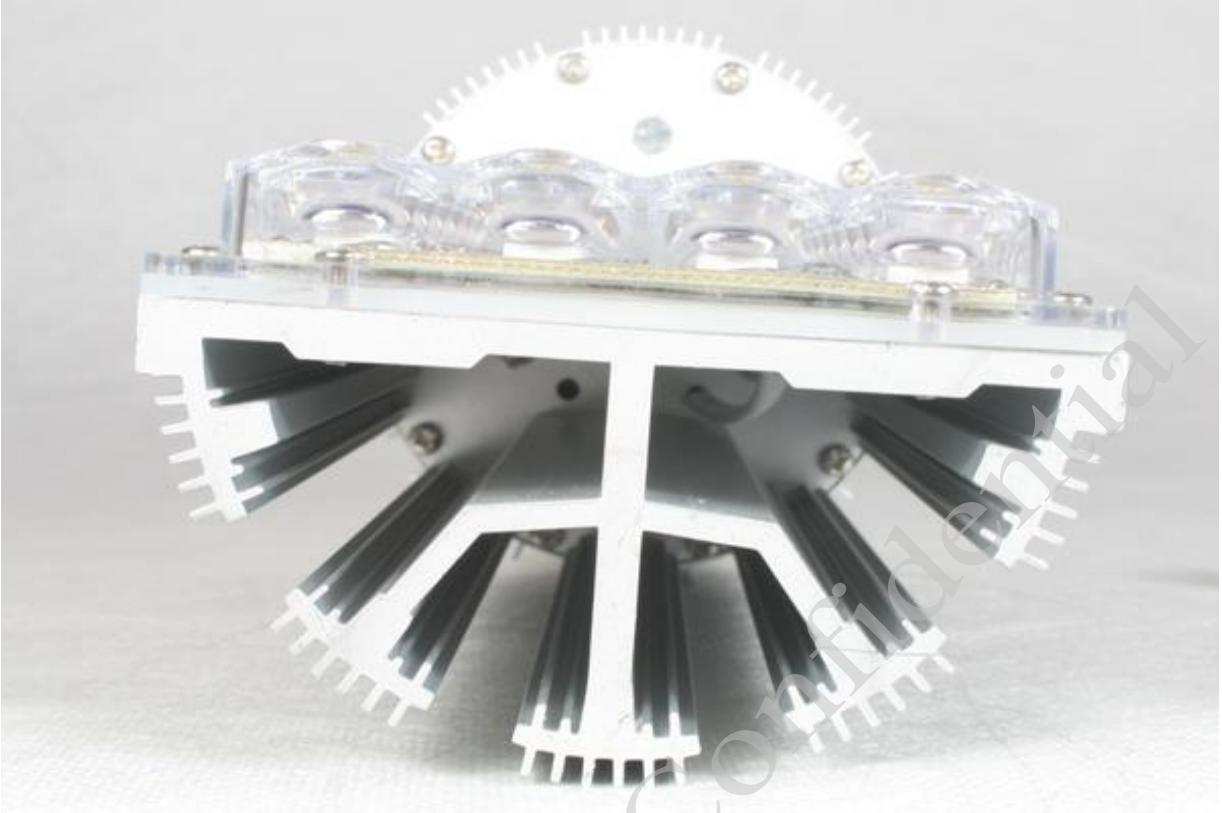

OkSolar.com Confidential

IQAirport.com

Have you checked the IQ of your Airport Lighting systems?

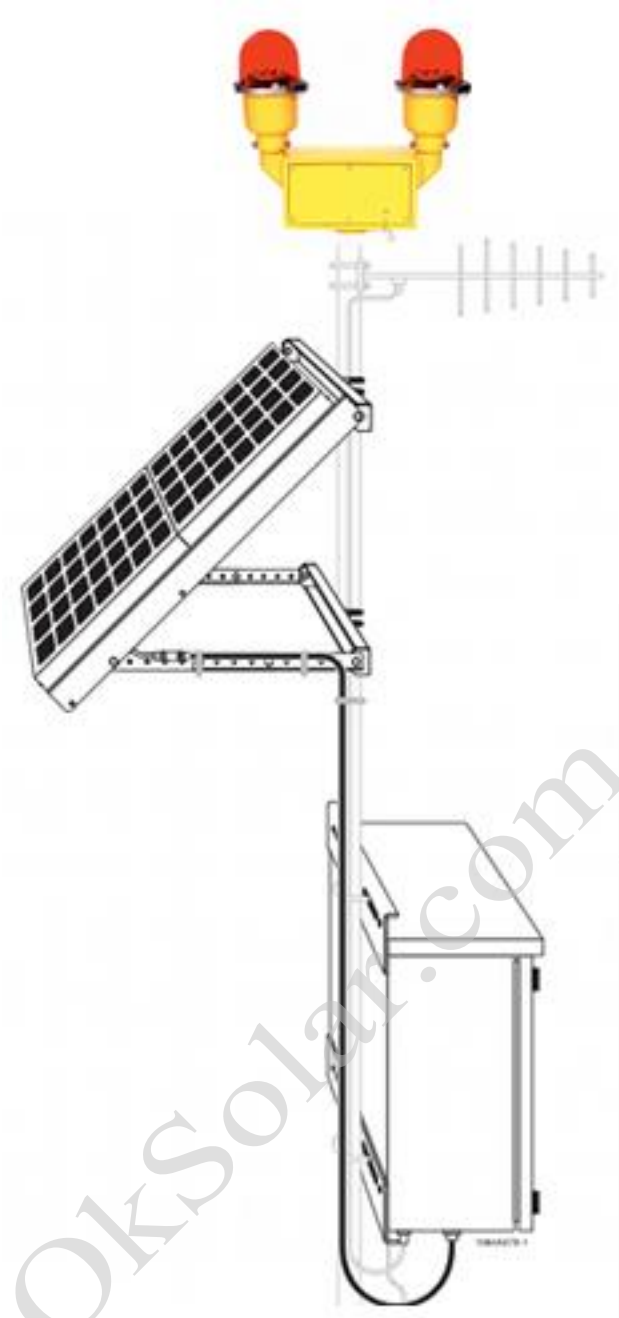

OkSolar.com Confidential

IQAirport.com

Have you checked the IQ of your Airport Lighting systems?

Contact Information: http://www.IQAirport.com/contact - **Email:** Sales@OkSolar.com